HAINBUCH

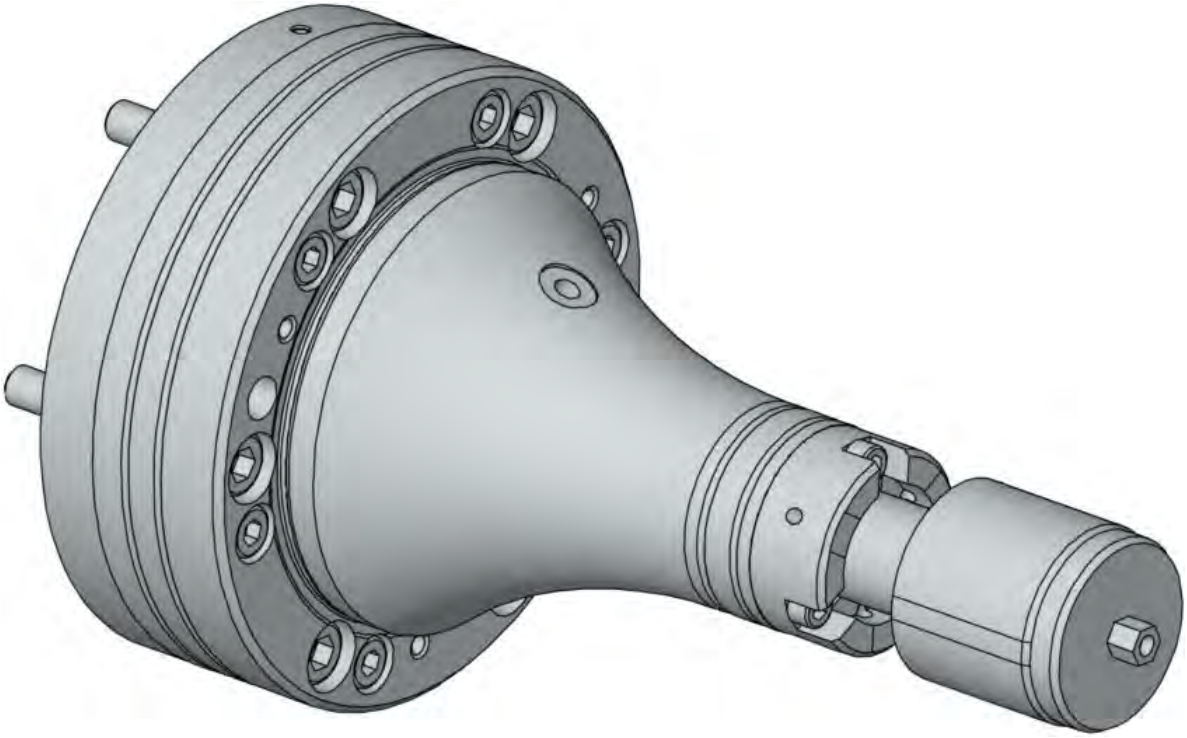

Installation manual

EN

Segmented mandrel T213

KAPP

Table of contents

»Translation of original installation manual«

1 General

1.1 Information about this manual

This manual enables safe and efficient handling of the clamping device.

The manual is a component of the clamping device and must be kept in the immediate vicinity of the clamping device where it is accessible for personnel at all times. Personnel must have carefully read and understood this manual prior to starting all tasks. The basic prerequisite for safe work is compliance with all the safety instructions and handling instructions in this manual.

Illustrations in this manual are provided for a basic understanding and may deviate from the actual model of the clamping device.

It is assumed that the reader is familiar with standard procedures, such as cleaning the mounting surfaces.

1.2 Explanation of symbols

Safety instructions

Safety instructions are indicated by symbols in this operating manual. The safety instructions are introduced by signal words that express the scope of the hazard.

The safety instructions must be strictly adhered to. You must act prudently to prevent accidents, personal injury, and material damage.

DANGER

… indicates an imminent dangerous situation than can result in death or serious injury if it is not avoided.

WARNING

… indicates a possible dangerous situation that can result in death or serious injury if it is not avoided.

CAUTION

… indicates a possible dangerous situation that can result in minor or light injury if it is not avoided.

NOTE

… indicates a possible dangerous situation that can result in material damage if it is not avoided.

Tips and recommendations

… indicates useful tips and recommendations, as well as information for efficient and trouble-free operation.

1.3 Limitations of liability

All information and instructions in this operating manual have been provided under due consideration of applicable standards and regulations, the current state of technology, as well as our many years of experience.

The manufacturer assumes no liability for damage due to:

- Failure to follow the instructions in the manual
- Non-intended use
- Deployment of untrained personnel
- Unauthorized conversions
- Technical changes
- Use of non-approved spare parts
- Use of non-approved accessories

The actual scope of delivery can vary from the explanations and graphic representations provided in this manual in the case of special versions, if supplemental order options are desired, or on the basis of the latest technical changes.

The agreed obligations in the delivery contract, the general terms and conditions, as well as delivery conditions of the manufacturer, and the statutory regulations valid at the time the contract was concluded, apply.

1.4 Max. RPM

CAUTION!

The maximum permissible speed is marked on the product.

By the combination of a clamping device and an add on clamping device a reduction of the maximum permissible speed may be necessary.

- Of all RPMs of the groups specified, the **lowest given RPM** must always be used.

Note that the clamping force is influenced by the centrifugal force of the clamping elements.

- If necessary, adjust the machining force!

1.5 Copyright

1.6 Scope of delivery

All tools and accessories that are not included in the scope of delivery are marked as optional.

In scope of delivery of the clamping device:

- 1 segmented mandrel

Optionally the scope of delivery of the clamping device includes:

- Spindle flange
- Clamping unit
  [segmented clamping bushing and draw bolt]
- Workpiece end-stop
- Changing tool for clamping unit type 213
- Eye bolts

1.7 Spare parts

WARNING!

Safety risk if the wrong spare parts are used!

Incorrect or defective spare parts can cause damage, malfunction, or total failure; they can also impair safety.

- Only use manufacturer's original spare parts.

Only purchase spare parts from authorized dealers or direct from the manufacturer see appendix.

1.8 Warranty terms

The warranty terms are included in the manufacturer's terms and conditions.

2 Safety

This section provides an overview of all the important safety aspects for optimal protection of personnel, as well as for safe and trouble-free operation.

2.1 Responsibility of the customer

The product is used in industrial applications. Consequently the owner of the product is subject to legal industrial safety obligations.

In addition to the safety instruction in this manual, generally valid safety and accident protection guidelines, and environmental protection guidelines as well as the machines' manual must be adhered to and complied with for the area of implementation of the device.

Note in particular that the status scans of the machine must be adjusted to the respective product.

DANGER!

Risk of injury due to thrown out parts!

Incorrect machine settings may lead to the throwing out of parts.

- The status scans the machine must be set to the respective clamping device.
- Regularly check the status scans of the machine, see chapter »Maintenance Schedule«. If the end position can not be reached the product may no longer be used.
- Observe the operating instructions of the machine.

WARNING!

Risk of injury!

An incorrect media supply [hydraulic, pneumatic], e.g. by damaged or missing seals or pipes, can cause serious personal injury.

- Hydraulic and / or pneumatic tubes must be secured by the machine by check valves and a permanent pressure monitoring!

2.2 Personnel requirements

WARNING!

Danger of injury due to insufficient qualification!

Improper handling of the clamping device can cause serious injury or material damage.

- Only have activities performed by personnel who are qualified to perform these activities.

The following qualifications are cited in the operating manual for the various activity areas.

- **Specialized personnel**
  are personnel who due to their specialized training, skills, and experience, as well as knowledge of the applicable regulations, are capable of executing the tasks assigned to them and of recognizing and avoiding possible hazards on their own.
- **Hydraulic specialist**
  The hydraulic specialist has been trained for the particular task area in which he is active and is familiar with the relevant standards and regulations. Due to his specialized training and experience the hydraulic specialist can perform tasks on hydraulic equipment and recognize and avoid possible dangers on his own.
- **Electric specialist**
  The electric specialist has been trained for the particular task area in which he is active and is familiar with the relevant standards and regulations.
  Due to his specialized training and experience the electric specialist can perform tasks on electric equipment and recognize and avoid possible dangers on his own.

Only persons from whom it can be expected that they reliably execute their work are considered as personnel. Persons whose capability to react is impaired, for instance through drugs, alcohol, or medication, are not approved.

- Comply with age-specific and job-specific regulations that are applicable at the installation site when selecting personnel.

2.3 Intended use

The clamping device is designed for installation in a machine tool according to CE compliant. Within the machine tool the clamping device is designed exclusively as a through-bore chuck for bar work and / or as an end-stop chuck for chuck work.

The clamping device should only be mounted, operated, maintained, and cleaned by instructed, specialized personnel.

Intended use also includes compliance with all the instructions in this manual.

The clamping device is to be used for the case of application contractually agreed between the producer/deliverer and the user, as well as such cases of application described in the product description which are also in accordance with the technical values.

The safe function of the clamping device is, as far as it can be foreseen, guaranteed when it is used for the intended purpose in accordance with the appropriate safety regulations.

Any use that extends beyond the intended use, or any other use of the clamping device is considered to be misuse and can cause dangerous situations.

WARNING!

Danger due to misuse!

Misuse of the clamping device can cause dangerous situations.

Particularly refrain from the following uses of the clamping device:

- Use in machines other than machine tools.
- Use in machine tools with technical data other than that specified on the clamping device.

Claims of any type due to damage arising from non-intended use are excluded.

Unintended and improper use of the Power Chuck is for example

- If workpieces are not clamped properly
- If safety regulations are disregarded and persons are working at the clamping device without additional protective devices e.g. for machining.

- If the clamping device is used for machines or tools for which it is not intended.

2.4 Personal protective equipment

Wearing of personal protective equipment is required to minimize health hazards when working with the device.

- Always wear the protective equipment necessary for the respective task when working with the device.
- Follow the instructions that have been posted in the work area.

Always wear

For all tasks always wear:

Protective work clothing

is tight-fitting work clothing with low resistance to tearing, with tight sleeves, and without projecting parts. It is primarily used to protect against entanglement by moving machine parts.

Do not wear rings, chains, or other jewelry.

Safety footwear

for protection against heavy falling parts and slipping on slippery substrates.

For special tasks wear

Special protective equipment is required when executing special tasks. Separate reference is made to this equipment in the specific sections of this manual. This special protective equipment is explained below:

Hard hat

to protect against falling and flying parts and materials.

Protective goggles

to protect eyes from flying parts and liquid splashes.

Protective gloves

to protect hands from friction, abrasion, puncture wounds, or deeper injuries, as well as from contact with hot surfaces.

Hairnet

to protect the hair from being caugth by the rotating parts of the machine.

2.5 Special dangers

In the following section residual risks are cited that occur due to installation of the clamping device in a machine tool. In each case the residual risks that have been determined based on a risk analysis of the machine must be specified by the customer.

- Follow the safety instructions listed here and the warnings in the other sections of this manual to reduce health hazards and to avoid dangerous situations.

Horizontal / lying parts

WARNING!

Danger of injury due to horizontal parts!

Before transporting the clamping device in horizontal condition:

- Put the clamping device on a non-slip pad
- Screw in the eye bolts

Suspended loads

WARNING!

Life-threatening danger due to suspended loads!

Clamping device with weight more than 15 kg must be lifted with a crane. When lifting the clamping device there is a life-threatening hazard due to falling parts or parts swinging out of control.

- Never step under suspended loads.
- Never lift suspended loads over persons.
- Comply with the instructions concerning the intended attachment points. Ensure that the sling gear is securely seated!
- Do not attach lifting gear in projecting components.
- Only use approved hoists and sling gear with sufficient bearing capacity.
- Do not use rope and belts that are torn or frayed.

Moving parts

WARNING!

Danger of injury due to moving parts!

Rotating parts of the clamping device can cause serious injuries.

- Do not reach into moving parts or handle moving parts during operation.
- Note the gap dimensions of moving parts.
- Do not open covers when the device is in operation.
- Be aware of afterrun time:
  Prior to opening the covers ensure that all parts have come to a standstill.
- Wear tight-fitting protective work clothing in the danger zone.

Wrong clamping of the workpiece

WARNING!

Danger of injury due to incorrect clamping of the workpiece!

Incorrect workpiece clamping may lead to the ejection of the workpiece and result in serious injuries.

Under dimensioned parts can lead to incorrect clamping!

- Check the unmachined workpieces at random on dimensional accuracy.

Too low axial clamping force can lead to the reduction of radial clamping force!

Too high axial clamping force can lead to damage of the components of the clamping device!

- Check and adjust, if necessary, the axial clamping force regularly.
- Do random checks of the unmachined workpieces on dimensional accuracy.

Missing changing parts

WARNING!

Danger of injury due to missing changing parts!

When operating the clamping device without changing parts [segmented clamping bushing, clamping heads, workpiece end-stops] there is a higher danger of crushing injuries due to the stroke of movable components of the clamping device.

- The clamping process may not be initiated without assembled segmented clamping bushing and/or workpiece end-stop.

Parts with sharp edges

WARNING!

Risk of injury!

When screwing in individual components such as for example workpiece end-stops, threaded adapters and similar devices that are equipped with an external thread or wear caused by burrs, there is risk of cutting.

- The operation must be done only by qualified personnel.
- Wearing of gloves / [PSA / personal protective equipment] is required!

CAUTION!

Risk of injury!

A special use-dependent or job-based design can result in variations in the clamping strokes and thus the clamping force.

- The notes on the associated clamping situations or product drawing must always be observed

2.6 Further warnings

WARNING!

Risk of injury!

Never start rotating the clamping device without a clamped workpiece.

- For operation any available clamping position must be clamped with a suitable workpiece.

WARNING!

Risk of injury!

Never reach for the clamping device while the spindle is rotating.

Before starting to work on the clamping devcie, make sure the machine spindle cannot be put in motion.

WARNING!

Risk of injury!

Falling down of the clamping device or its parts can cause severe bruises and fractures.

The dead weight of the clamping device or its parts can lead to high physical stress.

- Always wear safety shoes.
- From weight 15 kg always use a suitable transport trolly.

WARNING!

Risk of injury!

By repeated reworking or wear and tear of the clamping surfaces sharp edges and burrs may appear and lead to severe cutting damages.

- Remove any burr.
- If necessary, replace worn parts with original HAINBUCH spare parts.

WARNING!

Risk of injury!

Missing o-rings or seals may cause severe injuries!

Due to missing / fallen out O-rings and seals compressed air or hydraulic fluids which are under high pressure may expel!

- Make sure that all O-rings / seals for the hydraulic / pneumatic connections are available and undamaged!
- If necessary lubricate them before assembly and/or during service.

WARNING!

Damage of clamping device!

The clamping device may be released exclusively in the non-rotating condition!

WARNING!

Risk of injury!

The operating screw may be turned out and/or thrown off!

- Never put the machine adapter into rotation if the operating system is not tightened with the given tightening torque!

WARNING!

Risk of injury!

By operating the clamping device without changing parts [clamping head, segmented clamping bushing, workpiece end-stop] there is an increased risk of crushing injuries by the stroke of the moving components of the clamping device.

CAUTION!

Risk of injury!

Bending into the machine work area can cause severe head injuries. Unexpected start up of the tool spindle can cause severe injury.

- Make sure that the system is pressure-free and that a restart of the machine can be excluded!

NOTE!

Malfunction of the safety device by incorrect machine setting!

By a missing or incorrect setting of the machine-side limit switch the clamping control can become invalid.

- In interfaces where no constructive idle stroke is taken into consideration, it must be ensured that the machine-side limit switch control is adjusted to the stroke of the clamping device.

WARNING!

Risk of injury by falling components!

During the assembly / disassembly components may fall down and cause serious injury and property damage due to its weight and its size.

- For assembly / disassembly two people are required.
- To safely lift the clamping device or its individual parts always use a crane and suitable transport belts as well as a suitable assembling aid.
- Make sure that a moving or falling of the clamping device is excluded.
- For transporting with transport trolley place the clamping device and its individual parts on a non-slip pad.

WARNING!

Risk of injury due to uncontrolled machine movement!

With manual loading of the clamping device with a workpiece uncontrolled machine movement can cause serious injury.

- The manual loading must be done in the jog mode!

2.7 Clamping force

The achieved clamping force can vary due to the maintenance condition of the clamping device [state of lubrication and degree of contamination] [see chapter »Maintenance«].

The clamping force must be checked at regular intervals. This requires the use of static clamping force measuring devices.

CAUTION!

Damages due to excessive draw and compressive force!

An excessive draw force and/or compressive force may damage the clamping device and/or the drawtube adapter.

- The max. draw force and compressive force may not be exceeded.

2.8 Screws

Moving parts

WARNING!

Danger of injury due to screws and stud screws being accelerated out of the device!!

Screws and stud screws radially attached to the product can be accelerated out of the device and cause severe injuries.

- At the product radially mounted screws and stud screws which were loosened for assembly and maintenance must be re-tightened with the correct tightening torque!
  The tightening torque is given at the product itself, near the screw or threaded pin, and/or given in chapter »Bolt torque«.
- All screws or stud screws that are not marked with a tightening torque specification are tightened with the prescribed tightening torque and locked [medium-strength bonding] in the factory and should only be unscrewed after consultation with the manufacturer. If in doubt you must contact the manufacturer immediately to determine the subsequent procedure.

2.9 Functionality

NOTICE!

With high contamination of the clamping device the functionality is no longer guaranteed.

- The cleaning and maintenance intervals must be observed.

2.10 Environmental protection

NOTE!

Environmental hazard due to incorrect handling!

Incorrect handling of environmentally hazardous substances, particularly improper disposal, can cause significant environmental damage.

- Always comply with the instructions cited below
- If environmentally harmful substances should inadvertently get into the environment, initiate suitable measures immediately. If in doubt notify the responsible municipal authority about the damage.

The following environmentally harmful substances are used:

Lubricants

Lubricants like greases and oils can contain toxic substances. Ensure that they do not get into the environment.

The device must be disposed of by a specialized disposal company.

To achieve trouble-free operational performance of the clamping device only use HAINBUCH lubricants. See the appendix for reference addresses.

3 Technical data

3.1 General information

The clamping device is available in different sizes and variants.

Information about e.g.

- dimensions
- weight

you will find on the corresponding drawing that you can order at HAINBUCH.

WARNING!

Risk of injury!

Exceeding the permissible technical data can result in serious personal injury and material damage.

- The technical data [labeling on the product, the associated instruction manual] must be complied with and may not be modified by the operator!

3.2 Operating conditions

Environment	Specification	Value	Unit
	Temperature range	15 - 65	°C
Mechanical actuating	In each possible operating condition the maximum draw force and compressive force may not be exceeded!		

3.3 Power specifications

NOTE!

Material damage if the power specifications do not agree!

If the power specifications of clamping device, machine adapter and machine do not agree, severe damage extending to total damage can occur.

- Only assemble clamping devices and adapters in machines with the same power specifications.

Information on maximum clamping force and draw-tube force is provided on the clamping device and the adapter.

- If the power values become unreadable through the abrasive effect, please refer from the manual and/or get in contact to the manufacturer.

3.4 Type designation

Fig. 1

The type designation is on the product and includes the following information:

1 ID no. [marked with the # symbol]
2 Maximum speed [rpm]
3 Maximum clamping force [kN]

4 Structure and function

4.1 Overview [Variant screwed]

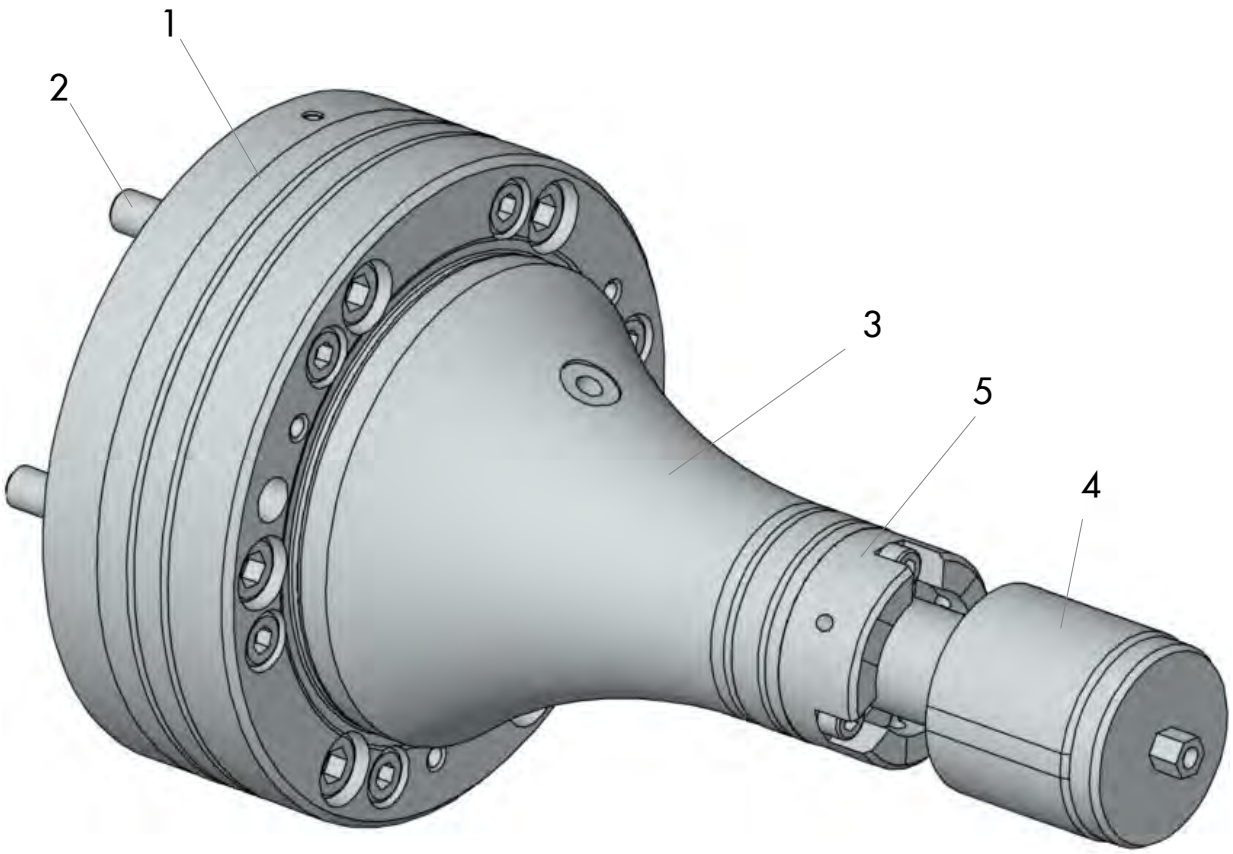

Fig. 2

1. Spindle flange
2. Mounting screws
3. Segmented mandrel type 213
4. Clamping unit
5. Workpiece end-stop

4.2 Overview [Variant HSK]

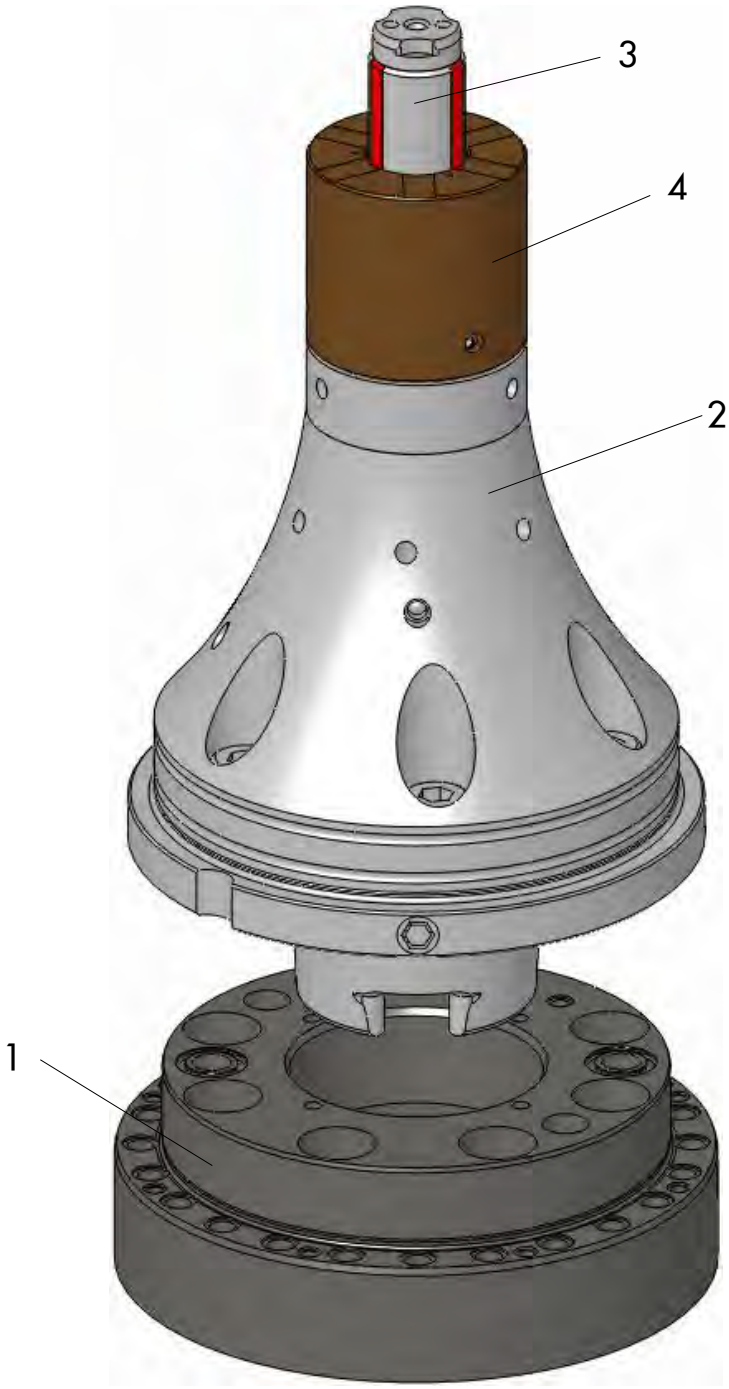

Fig. 3

1. HSK reception
2. Segmented mandrel type 213
3. Clamping unit
4. Workpiece end-stop

4.3 Brief description

The segmented clamping bushing type 213 functions according to the pull-back principle.

With clamping the workpiece is pulled by the pull-back principle to the end-stop for an additional workpiece stabilization.

The segmented clamping bushing is engaged to the draw bolt at its upper end. Therefor the mandrel body can be realized more rigid. This type of segmented mandrel is very suitable for gear cutting with the interrupted cuttings.

The vulcanized segmented clamping bushings are delivered assembled to the draw bolt as a clamping unit which can be changed easily. With bigger clamping diameters the segmented clamping bushings can also be changed separately when using a two-piece draw bolt.

4.4 Optional Accessories

The accessories described here are not included in the scope of delivery.

Specially developed segmented clamping bushings match to the respective maximum RPM are available for each clamping device. Trouble-free and precise function of HAINBUCH clamping devices is only ensured when using original HAINBUCH segmented clamping bushings.

Lubricating grease and grease gun are required for cleaning and preservation of the clamping device. The lubricating grease is also specially matched for protection of the vulcanized segments of the segmented clamping bushings and increase their service life and elasticity by a significant factor.

4.4.1 Clamping unit

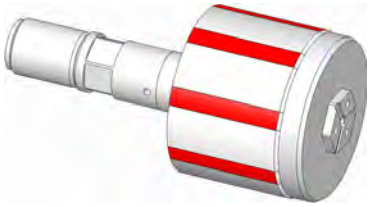

Fig. 4

The clamping unit consists of a draw bolt and a segmented clamping bushing.

The segmented clamping bushing is offered with a clamping diameter manufactured according to the customers needs.

4.4.2 Changing tool

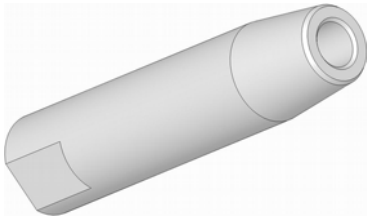

Fig. 5

With bigger clamping diameters you can change the segmented clamping bushing by using the changing tool.

4.4.3 Workpiece end-stop

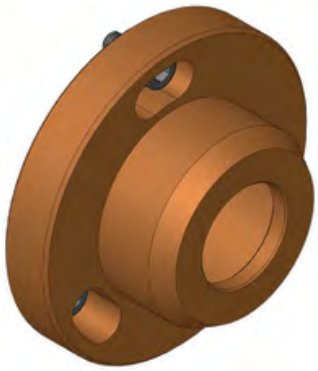

Fig. 6

The workpiece end-stop is manufactured with a end-stop dimension according to the customers request. In combination with the segmented clamping bushing and the segmented mandrel it provides a functional unit.

4.4.4 Grease

Fig. 7

The grease for chuck and mandrel lubrication is supplied in a 1000g can. The order number for the grease is 2085/0003; it can be ordered from HAINBUCH.

4.4.5 Grease gun

Fig. 8

The grease gun is filled with universal grease, which is pressed into the clamping device. The grease gun has a pointed mouthpiece. The order number for the grease gun is 2086/0004; it can be ordered from HAINBUCH.

5 Transporting, packaging and storing

5.1 Safety instructions for transporting

Unbalanced package

WARNING!

Danger of falling due to an unbalanced package

Packed goods can have an unbalanced package. If attached incorrectly the package can tip and cause life-threatening injuries.

- Note the markings on the packages.
- Attach the crane hook in such a manner that it is located above the center of gravity.
- Carefully lift and see if the load tilts. If necessary change the attachment.

Transport!

- For transport always use a suitable clamping means / crane.
- Make sure that a rolling / falling of the clamping device is not possible.

5.2 Symbols on the packaging

Fragile

Identifies packages with fragile or sensitive contents.

Handle the packed goods with care; do not allow them to fall, and do not subject them to impact.

Protect from moisture

Keep packed goods dry and protected against moisture.

5.3 Transport inspection

Check delivery immediately upon receipt to ensure that delivery is complete and to identify any transport damage.

Proceed as follows it there is apparent external damage:

- Do not accept the delivery, or only accept it with reservation.
- Note the extend of transport damage on the transport documents or on the transport company's delivery ticket.
- Submit a complaint.

Report any defect as soon as it is detected. Claims for damage compensation can only be enforced during the applicable periods for giving notice of lack of conformity.

5.4 Unpacking and inner-company transportation

Usually the clamping device is packed vertically. Depending on the size it has threaded bores in the circumference of the clamping device for assembling the eye bolts.

To safely lift the clamping device out of the package it must be hooked into a crane depending on the weight.

For transporting with transport trolley the clamping device must be positioned in standing condition. Make sure that a non-slip pad has been laid.

All tools and accessories which are not in scope of delivery are marked as optional in the operating instructions.

- Two people are required for this task.
- Special tools required:
  - Crane and lifting eye bolts from weight 15 kg

Fig. 9

6. Screw lifting eye bolts into the thread in the circumference of the clamping device.
7. Hook the load-handling equipment into the lifting eye bolts.
8. Use a crane to carefully lift the clamping device out of the transport packaging and put it down on a stable, level substrate.
9. Prevent the clamping device against rolling away.

5.5 Packaging

About the packaging

Individual packages are packed according to the expected transport conditions. Environmentally-friendly materials have been used exclusively for the packaging.

Packaging should protect the specific components from transport damage, corrosion, and other damage until installation. Therefore do not destroy the packaging, remove it just before installation.

The packed goods are sealed in foil airtight and packed in cartons. See the »Technical Data« section for the specific weight of the respective sizes.

Handling packaging materials

Dispose of packaging materials in accordance with the respectively valid statutory regulations and local guidelines.

NOTE!

Improper disposal causes environmental damage!

Packaging materials are valuable raw materials and in many cases they can be reused, or they can be effectively treated and recycled.

- Dispose of packaging materials in an environmentally responsible manner.
- Comply with locally applicable disposal guidelines. If necessary commission a specialized company to dispose of packaging.

5.6 Storing

Under certain circumstances instructions for storage and subsequent storage are affixed to the packages that extend beyond the requirements cited here.

Comply with these instructions accordingly.

Storage of packages

Only store packages under the following conditions:

- Do not store outdoors.
- Store in a dry and dust-free location
- Do not expose to aggressive media
- Protect from direct sunlight
- Avoid mechanical vibration
- Storage temperature: 15 bis 35 °C
- Relative humidity: max. 60 %
- For storage periods longer than 3 months:
  - Check the general condition of all parts and the packaging at regular intervals.
  - Touch up or re-apply anti-corrosion agents as needed

Subsequent storage of the clamping device

Only re-store the clamping device under the following conditions:

- Thoroughly clean the clamping device prior to subsequent storage [see section »maintenance«]
- Thoroughly oil and grease the clamping device. [see section »Maintenance«]
- Store the clamping device in airtight foil
- The clamping device must be stored securely in position. If this is not guaranteed, use a suitable container for the clamping device or equip the shelf with a circumferential securing edge.

6 Assembly

WARNING!

During the initial installation of the clamping device severe injuries may occur.

- The initial installation must be done only by qualified personnel.
- All screws remaining in the clamping must be tightened firmly.
- All tools and keys must be removed after installation.
- Always wear personal protective equipment!

NOTE!

In the product screws can be installed which are secured with sealing wax.

- The screws secured with sealing wax must not be opened.

6.1 Assembly

When delivering the segmented mandrel the changing parts are not pre-assembled.

The assembly differs by the machine to which the clamping device will be assembled:

- Assembly by HSK
- Assembly at machine spindle
- Assembly at capteX B

Two people are required for this task

Special tools required:

- Allen wrench
- Crane and eye bolts

CAUTION

Risk of injury!

When operating the clamping device without changing parts [segmented clamping bushing, workpiece end-stop] there is a higher danger of crushing injuries due to the stroke of movable components of the clamping device.

Increased danger by uncontrolled initiation of the clamping process [for example, by incorrect installation of the power supply or faulty programming].

WARNING!

Risk of injury!

Bending in the working area of the machine can cause severe head injuries!

CAUTION!

Risk of injury!

Unexpected start up of the tool spindle can cause severe injury.

- Make sure that the system is pressure-free and that a restart of the machine can be excluded!

Risk of injury!

Contamination of the mechanism can influence/reduce the stroke, thus the clamping force is reduced and thus, the workpiece is not properly tightened and can be thrown out.

- Clean the product regularly [see chapter »Maintenance and service«].

CAUTION!

Risk of injury!

If the axial actuating force is too low clamped workpiece may be thrown out.

If the axial actuating force is too high severe damages of the components of the clamping device may occur the throwing out of the workpiece.

- Before operation set the operation pressure back to operation level.
- The radial clamping force should be checked and adjusted regularly!
- The dimension of the workpieces should be checked regularly [clamping-ø]!

WARNING!

Danger of injury due to vertical suspended spindle!

Bending into the machine work are when assembling overhead can cause severe head injuries.

- Secure components prior to overhead assembly.
- For assembly on a vertically suspended spindle always use a suitable mounting aid.

Transport!

- For transport always use a suitable clamping means / crane.
- Make sure that a rolling / falling of the clamping device is not possible.

6.1.1 Assembly of the segmented mandrel [HSK]

For the assembly of the segmented mandrel the following steps are to be done:

1. Reduce the clamping pressure to minimum.
2. Screw in the eye bolts [A] in the circumference of the segmented mandrel.
3. Loosen the HSK tool clamping of the machine.

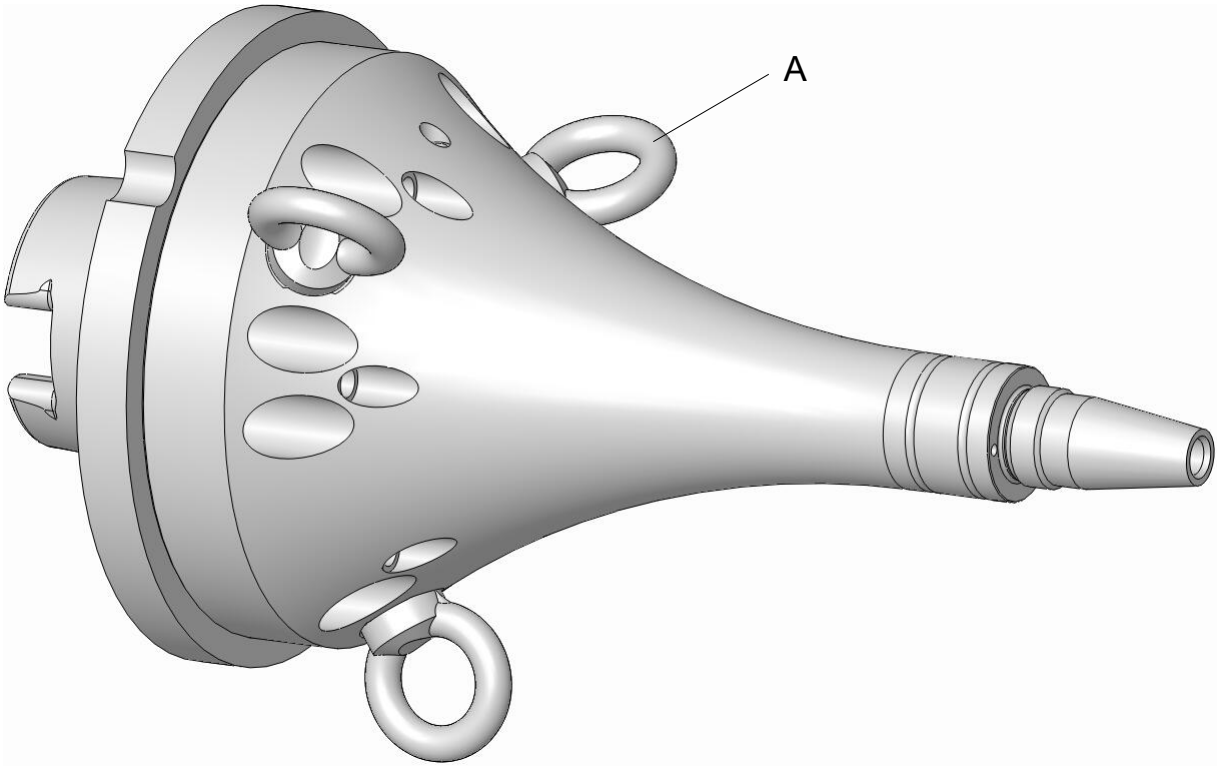

Fig. 10

NOTE!

Risk of injury due to improper connection of the hydraulic connections.

- Note the labeling of the hydraulic connections!

4. Put the segmented mandrel on the machine.
5. Clamp the HSK tool clamping of the machine.

Adjusting

The segmented mandrel is aligned by the factory.

If the perpendicularity deviates around more than 0.005 mm you can align the mandrel as follows:

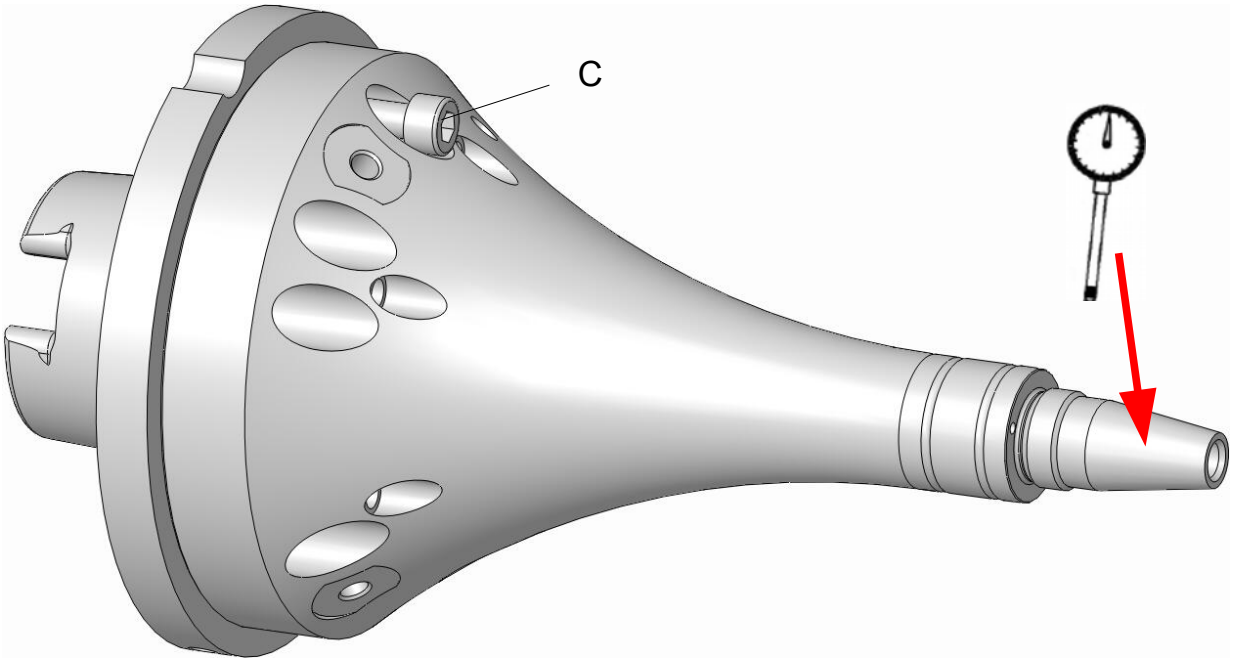

Fig. 11

6. Loosen the cylindrical screws [C] only for a few turns without removing them.
7. Check the concentricity at the clamping cone of the segmented mandrel [max. 0.005 mm], correct if necessary carefully with a plastic hammer.
8. Tighten the cylindrical screws [C] crosswise with the correct tightening torque.
9. Set the clamping pressure back to operating level.

6.1.2 Assembly of the segmented mandrel [machine spindle]

Risk of injury!

Leaking hydraulic oil can cause serious injury.

- Make sure that the system is depressurized during installation!

For assembly of the segmented mandrel the following steps are to be done:

1. Reduce the working pressure to minimum.
2. Screw in the eye bolts [A] in the circumference of the segmented mandrel.

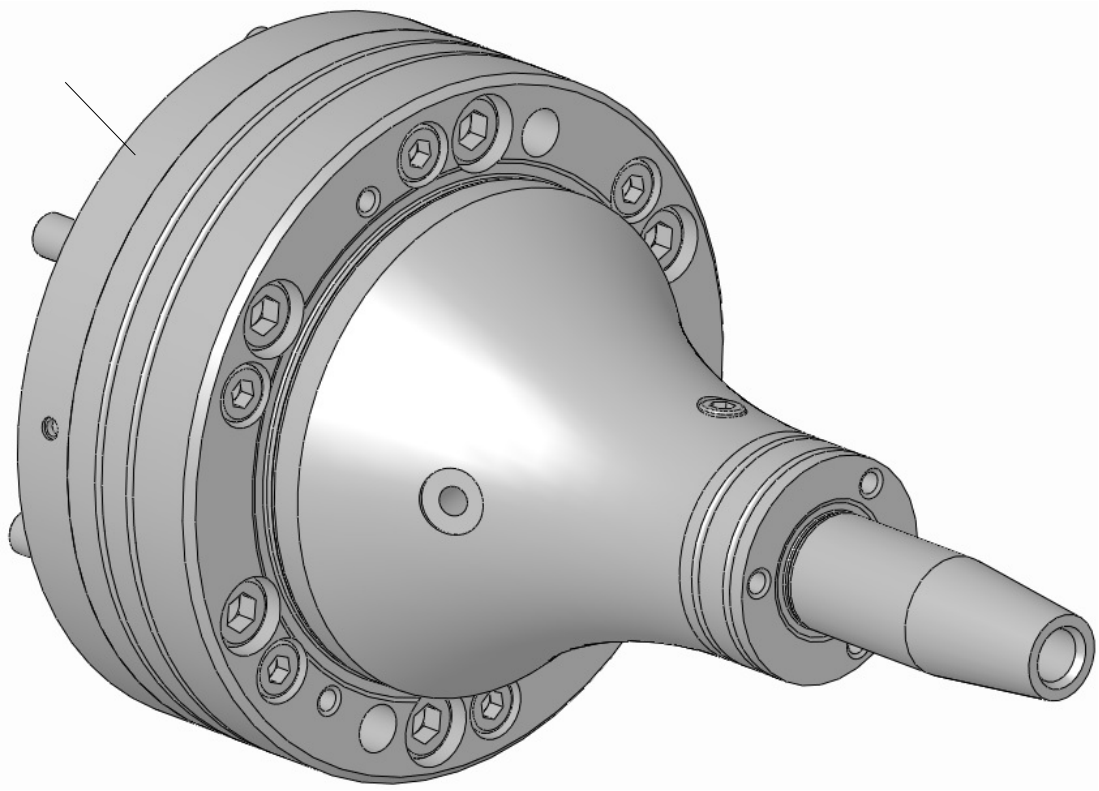

Fig. 12

3. Place the segmented mandrel on the machine. Screw in the cylindrical screws [A] and tighten them crosswise.
4. Tighten the cylindrical screws [A] firmly according to the manufacturers order.
5. Increase the clamping pressure again to the level required for machining.

Adjusting

The segmented mandrel is aligned by the factory.

If the perpendicularity deviates around more than 0.005 mm you can align the mandrel as follows:

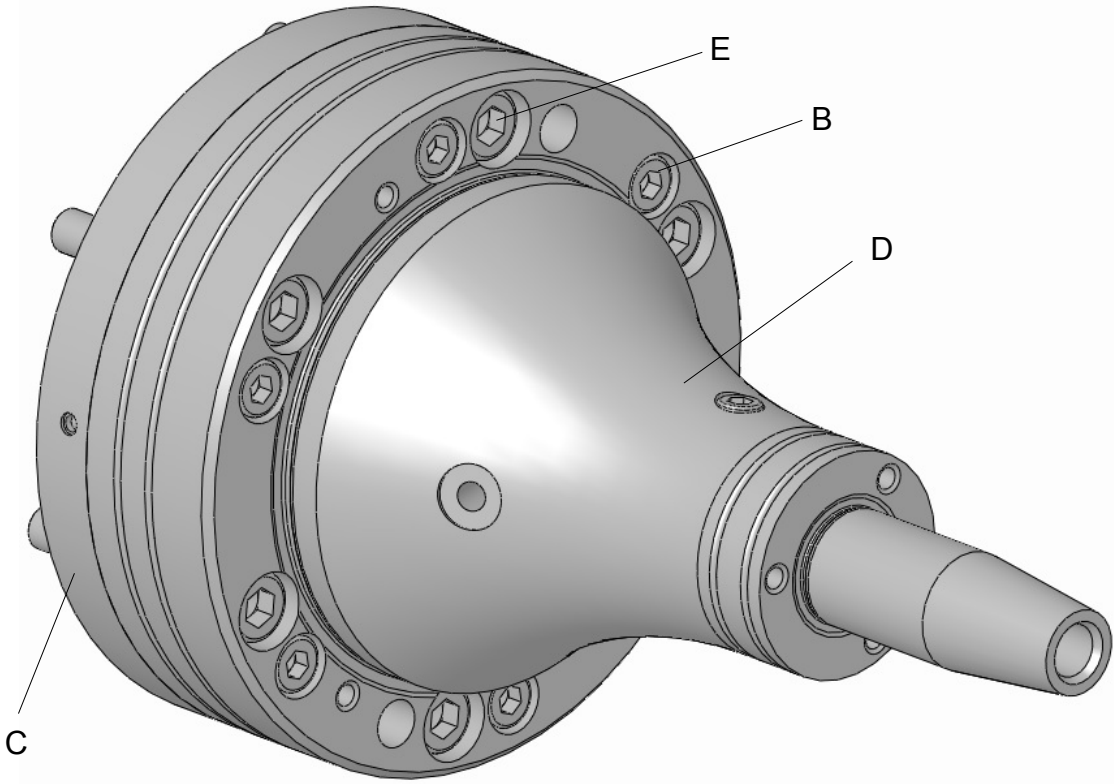

Fig. 13

6. Disassemble the segmented mandrel from the machine.
7. Check the concentricity at the spindle flange [C] to the mandrels body [D] [max. 0.005 mm].
8. Loosen the cylindrical screws [B] only a bit and correct carefully with a plastic hammer until the concentricity is max. 0.005 mm.
9. Tighten the cylindrical screws [B] with the correct tightening torque.
10. Put the segmented mandrel on the machine.
11. Loosen the cylindrical screws [B] only a bit.
12. Check the concentricity at the spindle flange [C] [max. 0.005 mm], correct if necessary carefully with a plastic hammer.
13. Tighten the cylindrical screws [E] with the correct tightening torque.

6.1.3 Assembly of the segmented mandrel [capteX]

For the assembly of the clamping device to the machine adapter the following steps are to be done:

CAUTION!

Risk of injury!

Secure the clamping device before assembling by the eye bolts and a crane!

Risk of injury!

Leaking hydraulic oil can cause serious injury.

- Make sure that the system is depressurized during installation!

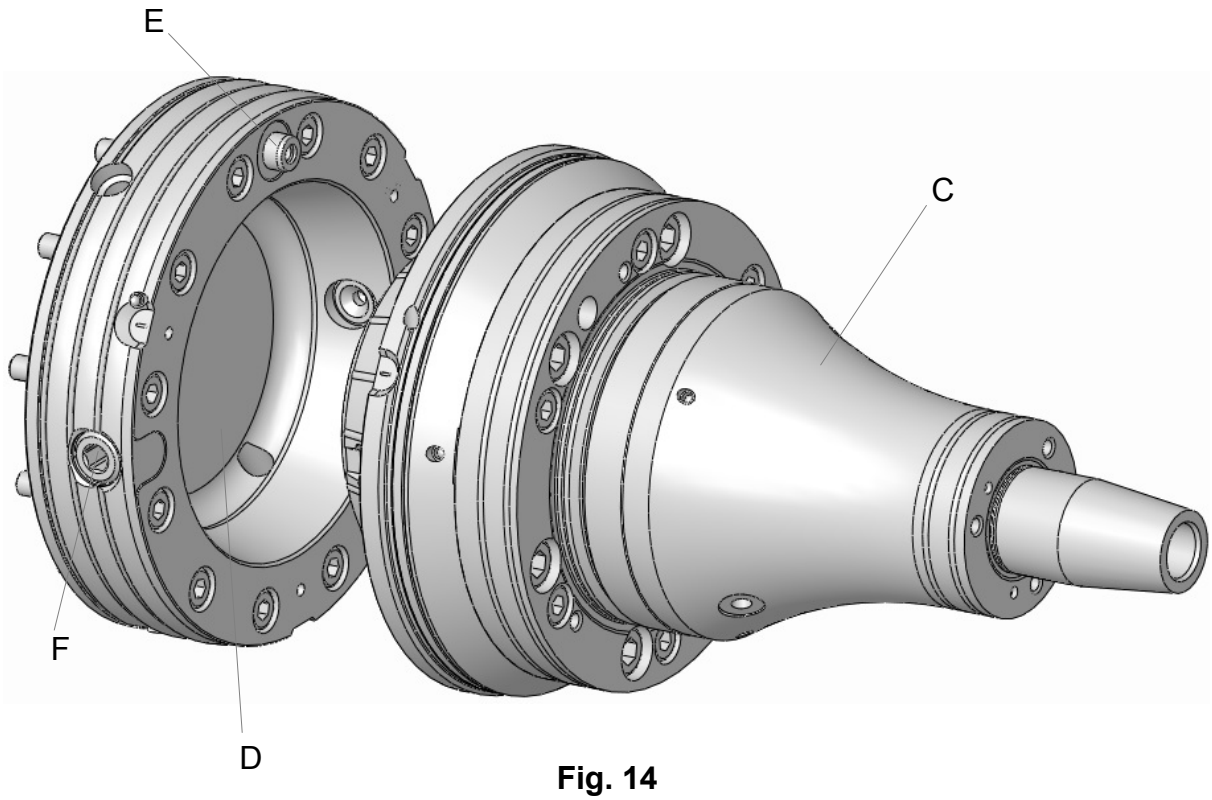

Fig. 14

1. Put the clamping device [C] on the machine adapter [D], position it by the positioning pin [E].
2. Turn the actuating screw [F] by using a key [in scope of delivery] with the correct tightening torque.

6.1.4 Assembly of the workpiece end-stop

Variant: screwed axially

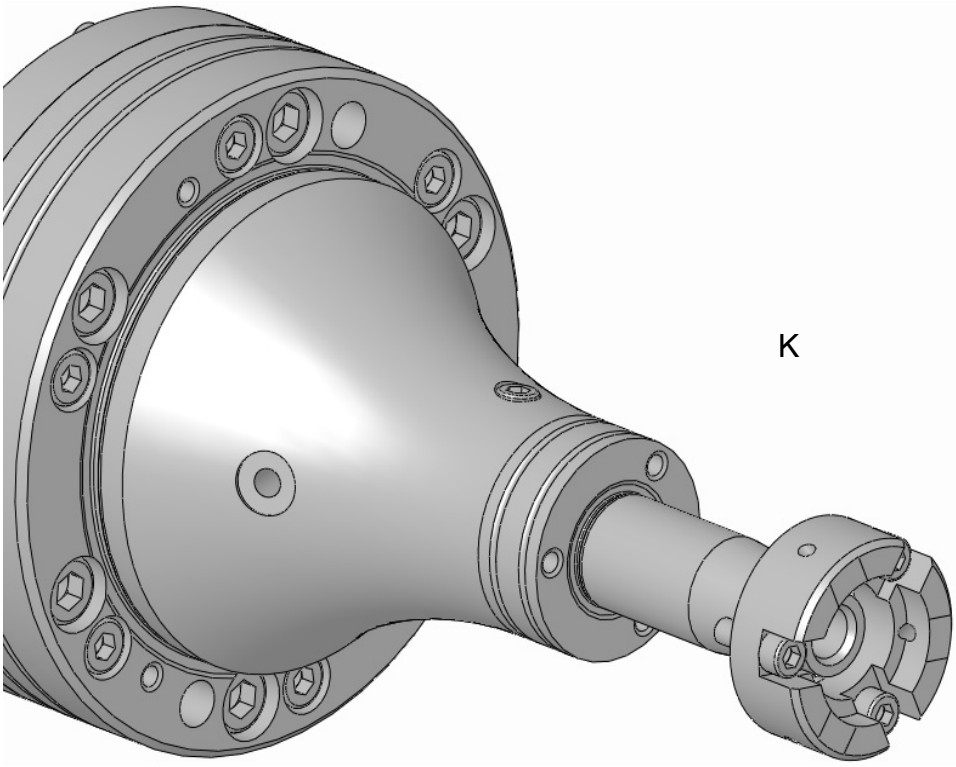

Fig. 15

For the assembly of the workpiece end-stop [K] the following steps are to be done:

1. Move the clamping cylinder into release position.
2. Put the workpiece end-stop [K] onto the clamping device.
3. Screw in the mounting screws into the end-stop [K], screw them into the mandrels body and tighten them firmly.

Variant: screwed radially

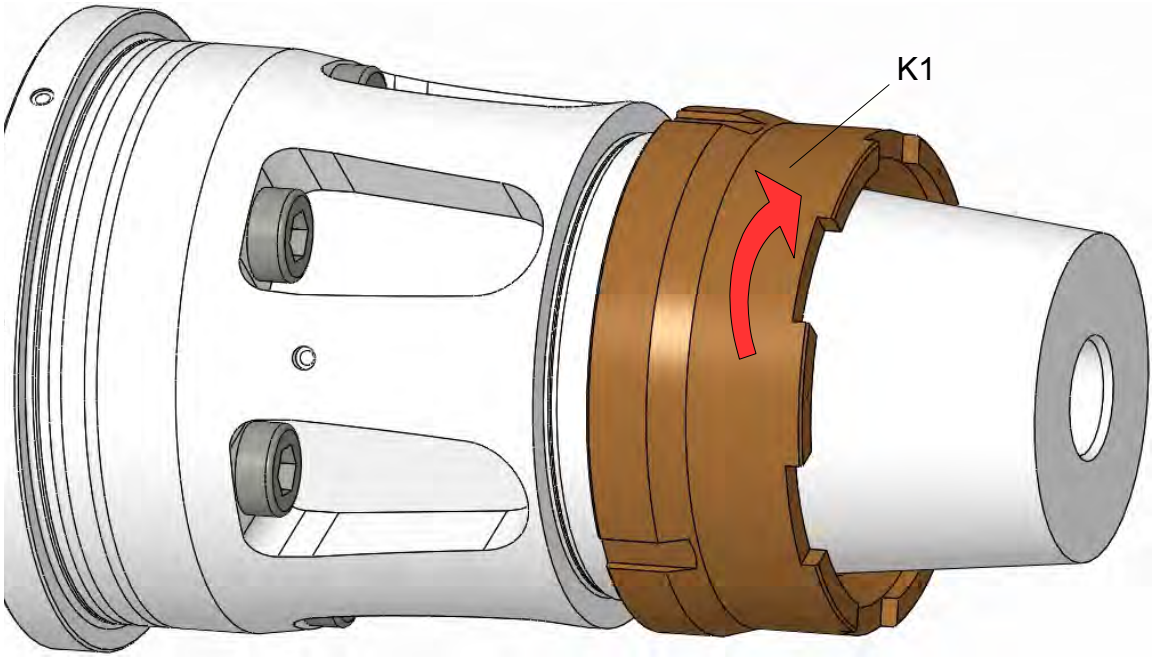

Fig. 16

For the assembly of the workpiece end-stop [K1] the following steps are to be done:

1. Move the clamping cylinder into release position.
2. Screw the workpiece end-stop [K1] onto the clamping device and tighten it firmly.

Variant: plugged on, radially clamped - screwing in the screw

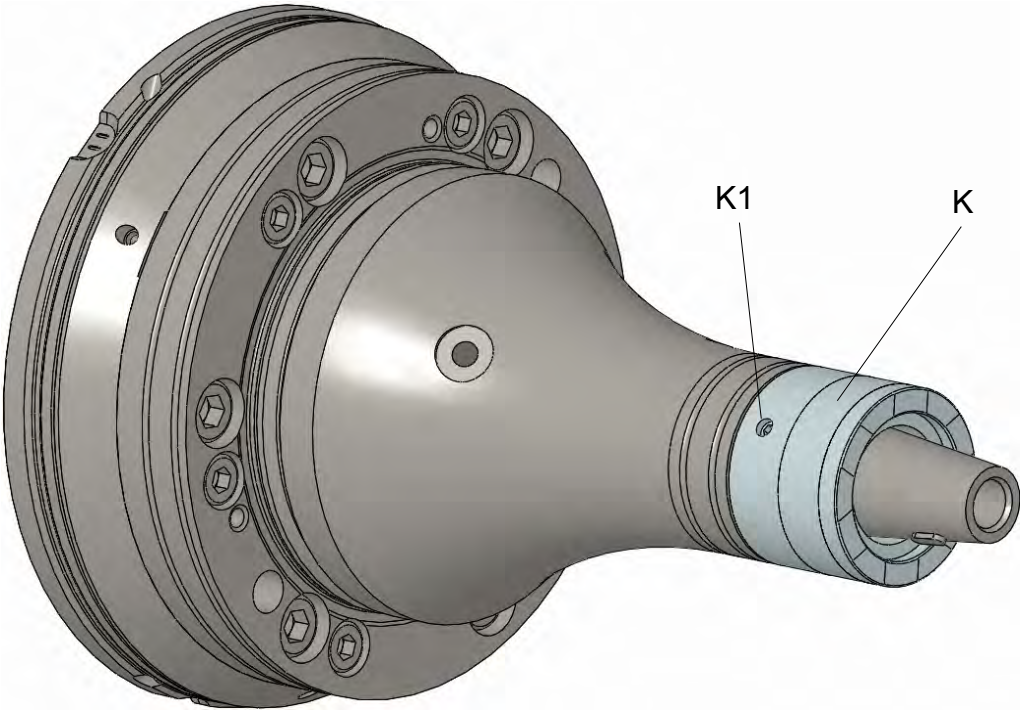

Fig. 17

For the assembly of the workpiece end-stop [K] the following steps are to be done:

1. Unscrew the grub screws [K1] in the workpiece end-stop [K] until they are flush with the inside of the workpiece end-stop [K].
2. Move the clamping cylinder into release position.
3. Put the workpiece end-stop [K] onto the clamping device.
4. Clamp the end-stop [K] by tightening the grub screws [K1] and tightening them with a torque of 5 Nm.

Variant: plugged on, radially clamped - unscrewing the screw

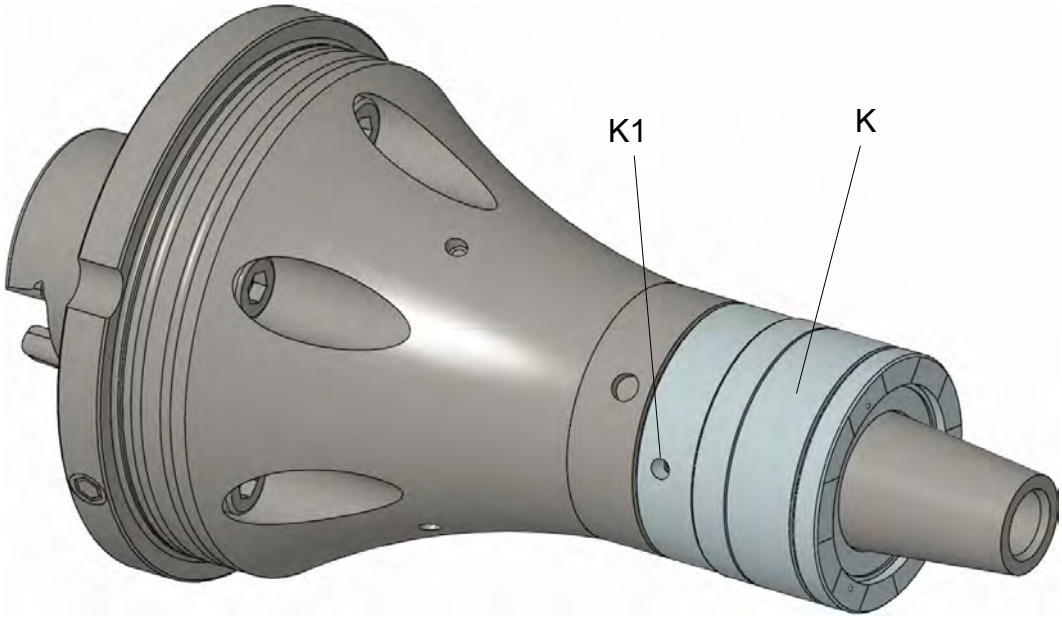

Fig. 18

For the assembly of the workpiece end-stop [K] the following steps are to be done:

1. Screw in the grub screws [K1] in the mandrel body until they are flush with the surface of the mandrel body.
2. Move the clamping cylinder into release position.
3. Put the workpiece end-stop [K] onto the clamping device.
4. Clamp the end-stop [K] by unscrewing the grub screws [K1] and tightening them with a torque of 5 Nm.

6.1.5 Assembly of the clamping unit

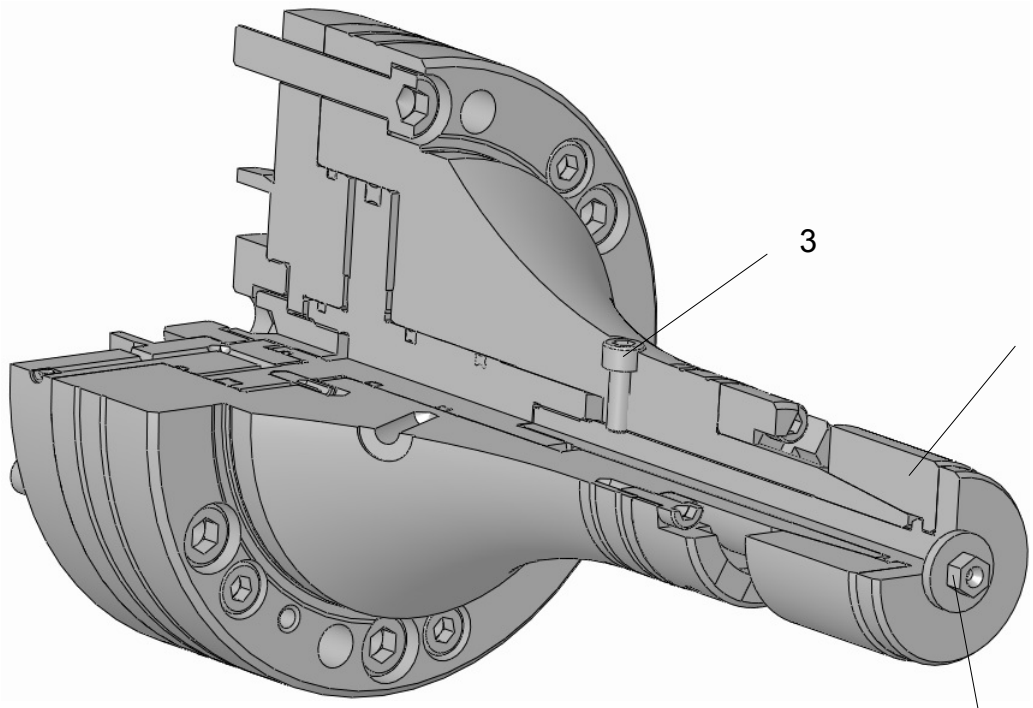

Fig. 19

For the assembly of the clamping unit [2] the following steps are to be done:

1. Reduce the clamping pressure to minimum.
2. If a radial locking screw is provided / available:
   - Loosen the locking screw [3] for only some turns without removing it.
   - Put the clamping unit [2] into the mandrel.

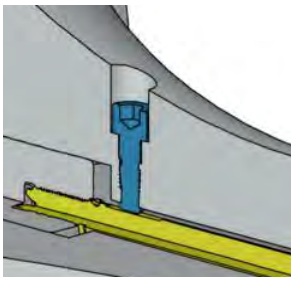

Fig. 20

> **NOTE!**
>
> The locking screw remains to have direct contact to the flat surface of the draw bolt.

   - Screw in the clamping unit [2] until the edge by the SW.
   - Screw in the safety screw [3] into the mandrels body, if necessary turn back the clamping unit [2] until the safety screw [3] is located correctly.
   - Tighten the safety screw [3] firmly with the required tightening torque [see marking on the mandrels body].
3. If <u>no</u> radial locking screw is provided / available:
   - Put the clamping unit [2] into the mandrel.
   - Screw in the clamping unit [2] until the edge by the SW.

4. The operating pressure can now be raised to the required level.

WARNING!

Risk of injury!

Tools and gages that are thrown out of the machine can cause injury.

- Remove all tools and gages from the working area of the machine before the machine is started up.

CAUTION

Damage of the clamping device!

If the axial actuating force is too low the clamped workpieces may be thrown out.

If the axial actuating force is too high severe damages of the components of the clamping device may occur the throwing out of the workpiece.

- Before operation / after assembly set the axial clamping force back to operation level.
- The operating axial clamping force should be checked and adjusted regularly!

WARNING!

Slipping danger due to escaping hydraulic fluid!

Escaping [sprayed out] hydraulic oil from adjacent machine components can cause serious personal injuries.

- Make sure that all o-rings/seals for the hydraulic / pneumatic interfaces are available and in undamaged condition.
- Make sure that the clamping device is empty and leakage of hydraulic fluid is avoided.

6.2 Workpiece

WARNING!

Risk of injury due to thrown out parts!

During clamping of the workpiece and the processing parts can be thrown and cause severe injuries and property damage.

- Check the clamping diameter of the workpiece.
- Only clamp workpieces that meet the dimensional requirements.
- For clamping very long workpieces use in addition a tailstock / a steady rest for support.
- Do not exceed the maximum permissible axial actuating force.
- Make sure that the applied axial actuating force is set correctly [neither too high nor too low].

CAUTION

Risk of injury!

When placing the workpiece:

- Make sure that the hands / fingers may not be clamped when inserting the workpiece!

Risk of injury!

Extra long clamping devices may be unstable during machining.

- For the clamping of long workpieces always use a tailstock/a steady rest and a clamping guard!

6.3 Inspections

NOTE!

Material damage due to damaged clamping devices!

A damaged, incomplete, or unbalanced clamping device can significantly damage or even destroy the machine tool and the workpiece.

- Only install undamaged, complete, and precisely balanced clamping devices.
- If in doubt contact the manufacturer.

Ensure the following points prior to each installation and start-up of the clamping device:

- All cylindrical screws of the clamping device must be present and tightened with the proper tightening torque.
- The balance screws [if provided] of the clamping device must all be present and undamaged.
- All rubber segments must be intact; this means that they are neither torn, nor are they porous at any point.
- All edges and bearing surfaces are intact; this means that they are neither broken nor do they show any signs of wear.
- The set speed of the machine tool should not exceed the maximum permissible speed of the clamping device.
- The maximum actuating force specified on the perimeter of the clamping device must not be exceeded.
- The axial actuating force of the machine must be sufficiently high.
- All mounting tools must be removed from the interior of the machine.
- Clamping device and workpiece must be compatible – check the clamping diameter regularly.
- The workpiece must be clamped into the clamping device with sufficient workpiece tension.
- Do a a measurement of clamping force.

6.4 Control of the stroke position

WARNING!

Crushing danger from moving parts!

Crushing danger from moving parts during controlling the stroke position!

Gaps, caused while controlling the stroke position, can cause severe injury.

- Only do the controlling of the stroke position with assembled changing parts.
- Only run the machine in set-up mode or jog mode.
- Do not reach into moving parts or handle moving parts during operation.
- Note the gap dimensions of moving parts.
- Wearing of gloves [PSA] is required!

6.5 Activities after production is concluded

1. Move the clamping device into unclamped position.
2. Switch off the machine tool and safeguard it from being switched on again.
3. Open the protective door or hood.
4. Clean the clamping device and a possibly mounted add on clamping device and adapter of chips and production residues using a soft, lint-free cloth and oil them lightly.
5. Close the protective door or hood.

7 Disassembly

If there is break in production that lasts longer than 3 days, the clamping device must be disassembled and properly stored in accordance with the manufacturer's specifications [see section »Transport, packaging, storage«].

Prior to disassembling:

- Put the machine in set up mode.
- Remove fuels and auxiliary materials, as well as residual processing materials and dispose of these items in an environmentally-responsible manner.

7.1 Safety

Safeguarding against restart

DANGER!

Life-threatening danger if restarted without authorization

When disassembling there is danger of the energy supply being switched on inadvertently. This poses a life-threatening hazard for persons in the danger zone.

- Prior to starting the tasks switch off all energy supplies and safeguard them from being switched on again.

WARNING!

Danger of injury due to falling components!

When mounting components can fall and cause severe injury and material damage.

- Two people are always required for this task.
- Use a crane.
- For assembly on a vertically suspended spindle always use a suitable mounting aid.

Transport!

- For transport always use a suitable clamping means / crane.
- Make sure that a rolling / falling of the clamping device is not possible.

WARNING!

Danger of injury due to vertical suspended spindle!

Bending into the machine work are when assembling overhead can cause severe head injuries.

- Secure components prior to overhead assembly.
- For assembly on a vertically suspended spindle always use a suitable mounting aid.

7.2 Disassembling the clamping device

Two people are required for this task

Special tools required:

- Allen wrench
- Crane and eye bolts

7.2.1 Disassembly of the clamping unit

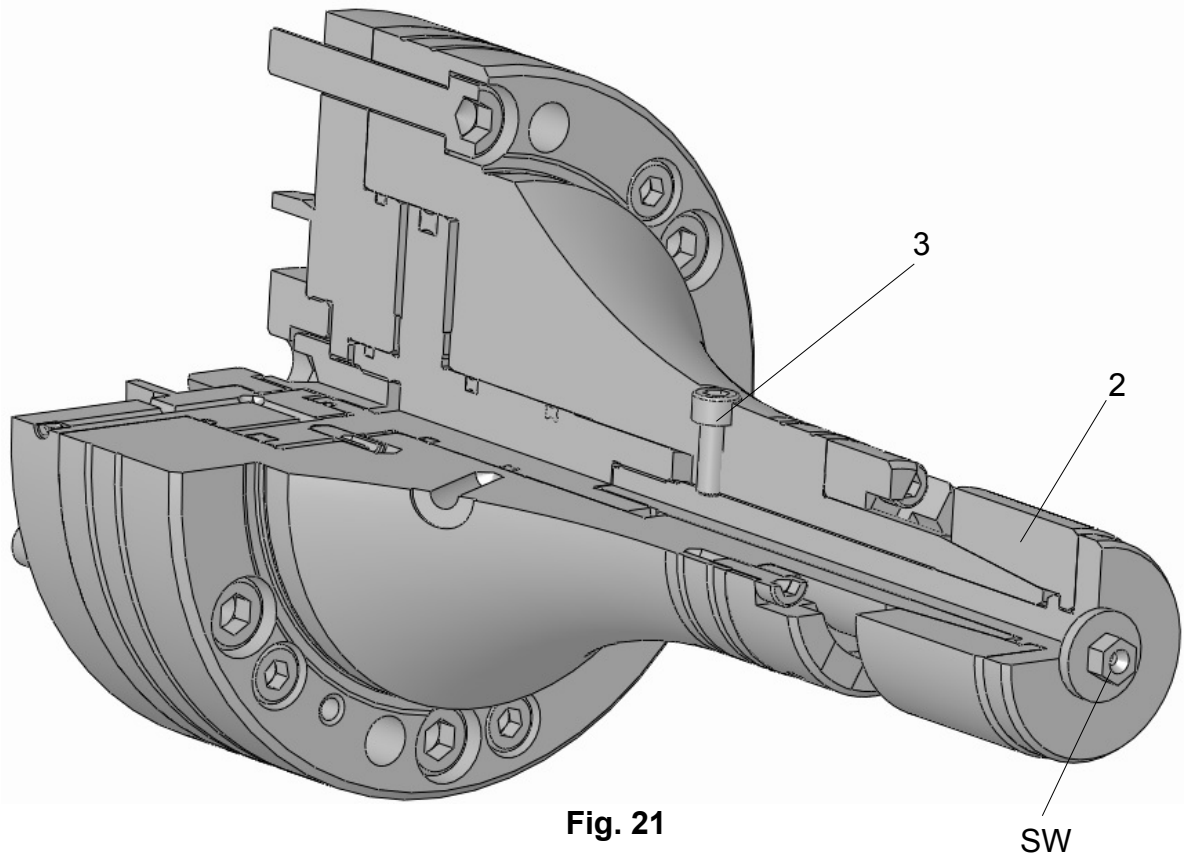

Fig. 21

Risk of injury!

Escaping [sprayed out] hydraulic oil can cause serious personal injuries.

- Make sure that the system is depressurized during disassembly!

For the disassembly of the clamping unit [2] the following steps are to be done:

1. If a radial locking screw [3] is provided / available:
   - Loosen the safety screw [3] in the mandrels body without removing it.
2. Unscrew the draw bolt of the clamping unit [2] by the SW, remove the complete clamping unit [2].

7.2.2 Disassembly of the workpiece end-stop

For the disassembly of the workpiece end-stop [1] the following steps are to be done:

1. Move the clamping cylinder into release position.
2. Disassemble the clamping unit, see »Disassembly of the clamping unit«.

Variant: screwed axially

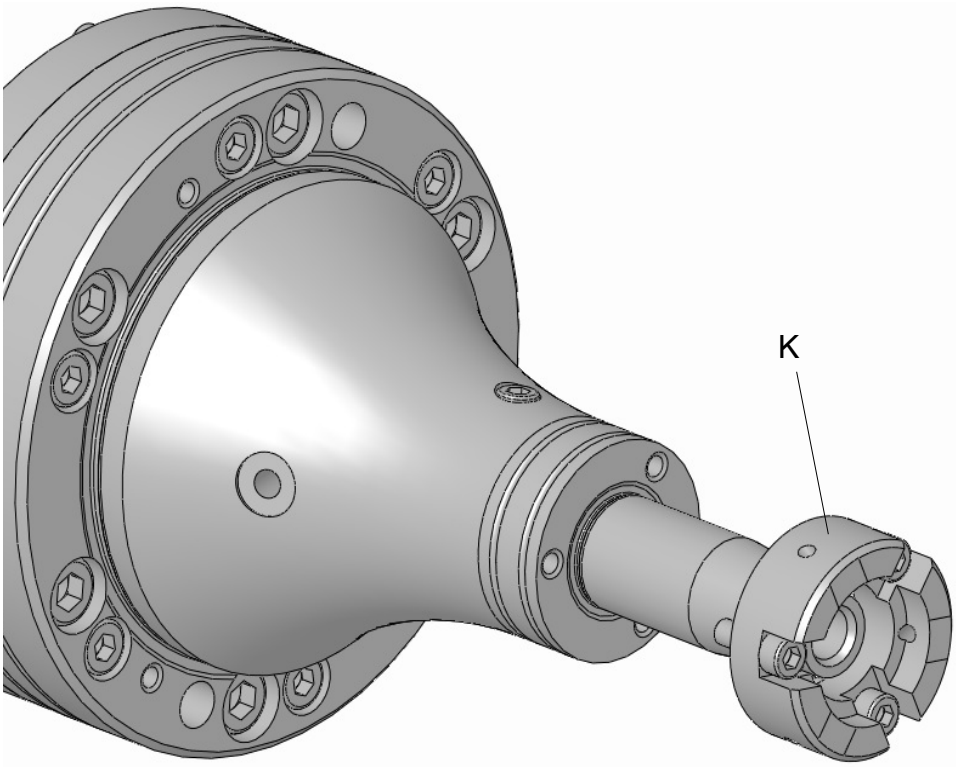

Fig. 22

1. Loosen and remove the mounting screws out of the workpiece end-stop [K].
2. Remove the workpiece end-stop [K] from the clamping device.

Variant: screwed radially

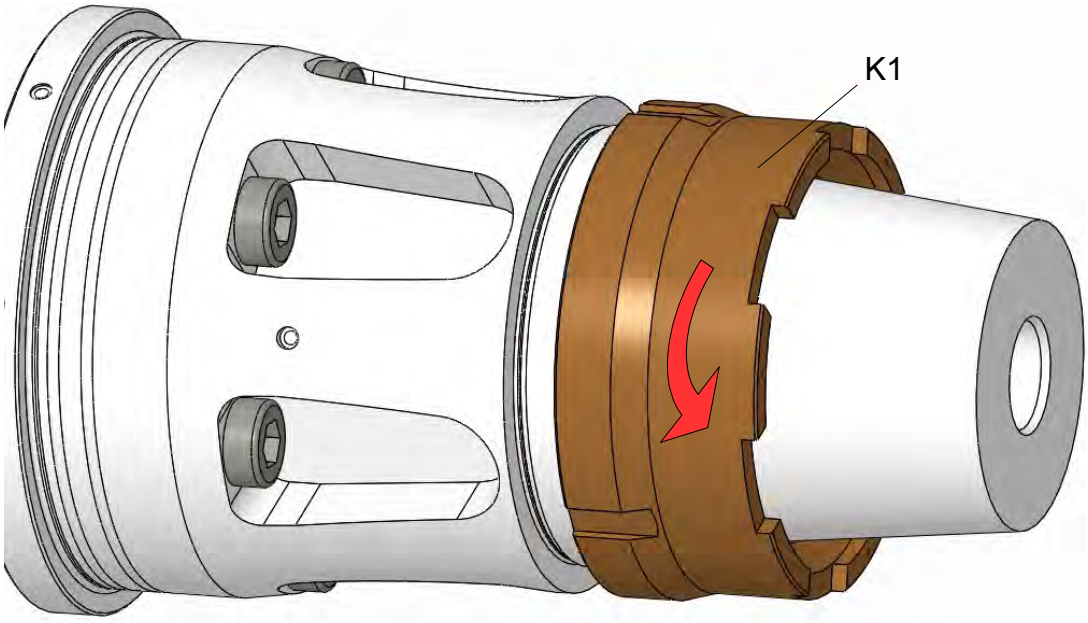

Fig. 23

1. Loosen the workpiece end-stop [K1] and unscrew it completely from the clamping device.

Variant: plugged on, radially clamped - screwing in the screw

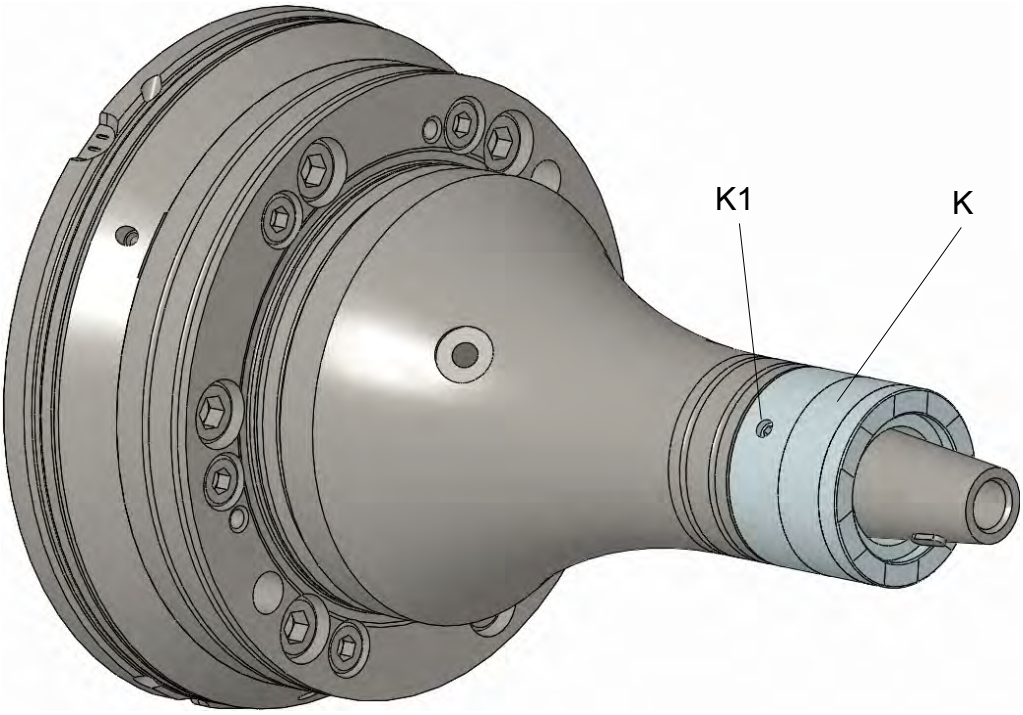

Fig. 24

For the disassembly of the workpiece end-stop [K] the following steps are to be done:

1. Unscrew the grub screws [K1] in the workpiece end-stop [K] until they are flush with the inside of the workpiece end-stop [K].
2. Move the clamping cylinder into release position.
3. Remove the workpiece end-stop [K] from the clamping device.

Variant: plugged on, radially clamped - unscrewing the screw

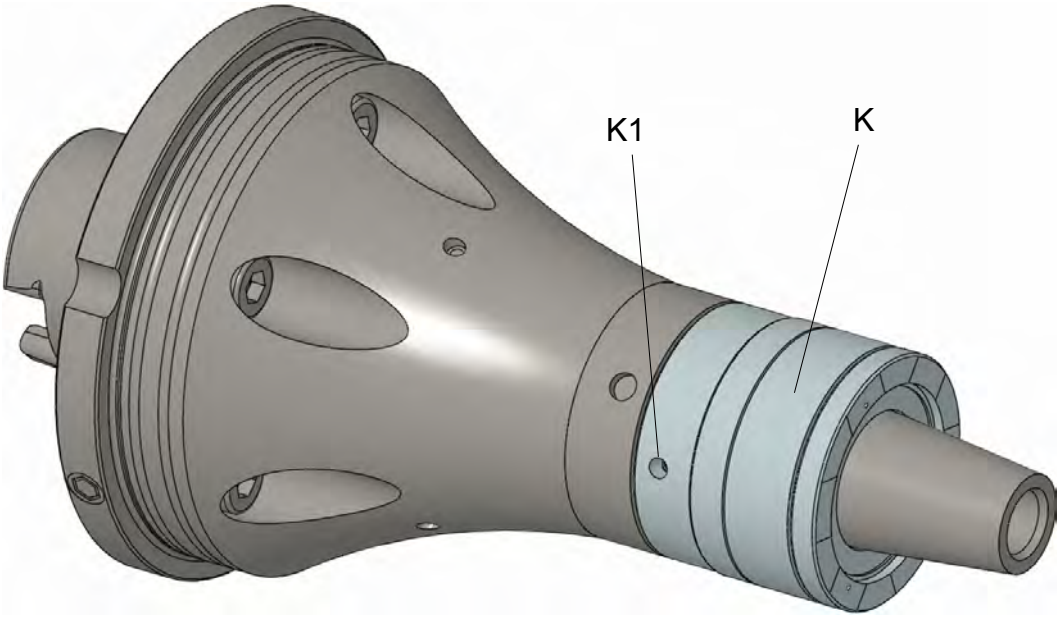

Fig. 25

For the disassembly of the workpiece end-stop [K] the following steps are to be done:

1. Screw in the grub screws [K1] in the mandrel body until they are flush with the surface of the mandrel body.
2. Move the clamping cylinder into release position.
3. Remove the workpiece end-stop [K] from the clamping device.

7.2.3 Disassembly of the segmented mandrel [HSK]

For assembly of the segmented mandrel following steps are to be done:

1. Reduce the working pressure to minimum.
2. Screw in the eye bolts [A] into the circumference of the segmented mandrel.

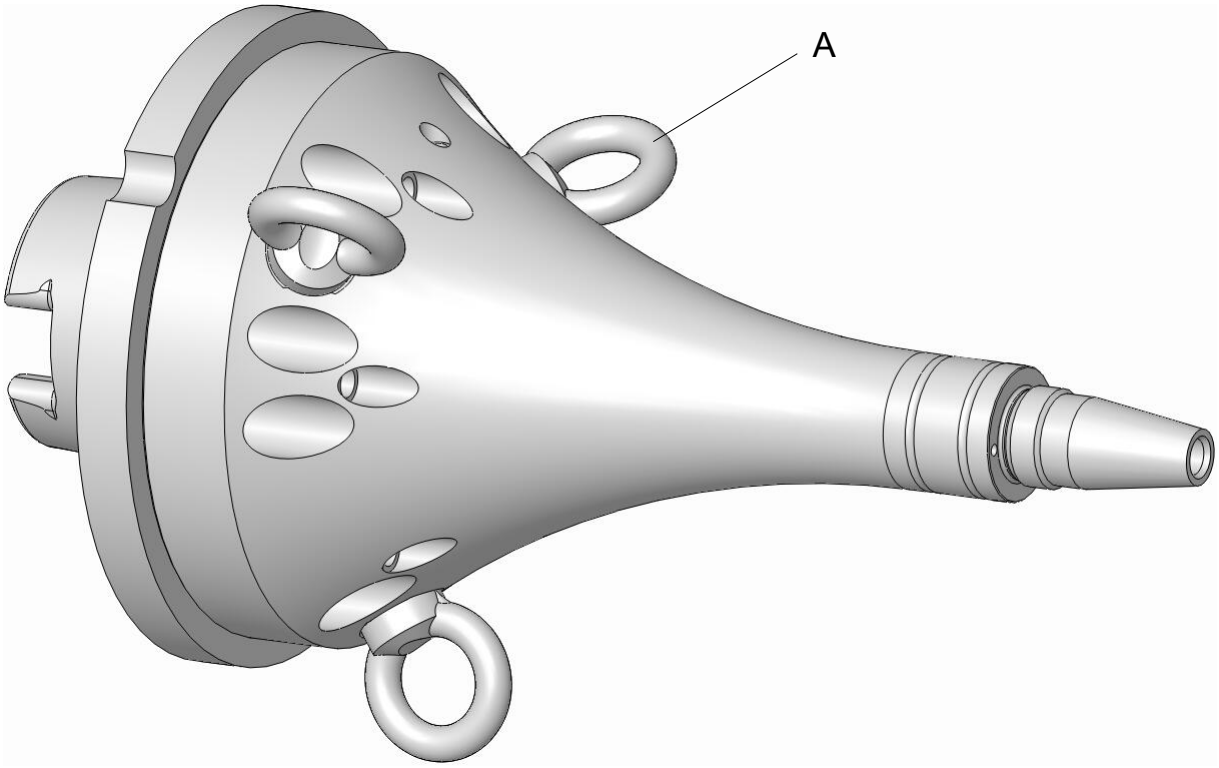

Fig. 26

3. Loosen the HSK tool clamping of the machine.
4. Remove the segmented mandrel from the machine.

7.2.4 Disassembly of the segmented mandrel [machine spindle]

For disassembly of the segmented mandrel following steps are to be done:

1. Move the drawtube of the machine into front end position and reduce the working pressure to minimum.
2. Screw in the eye bolts [A] into the circumference of the segmented mandrel.

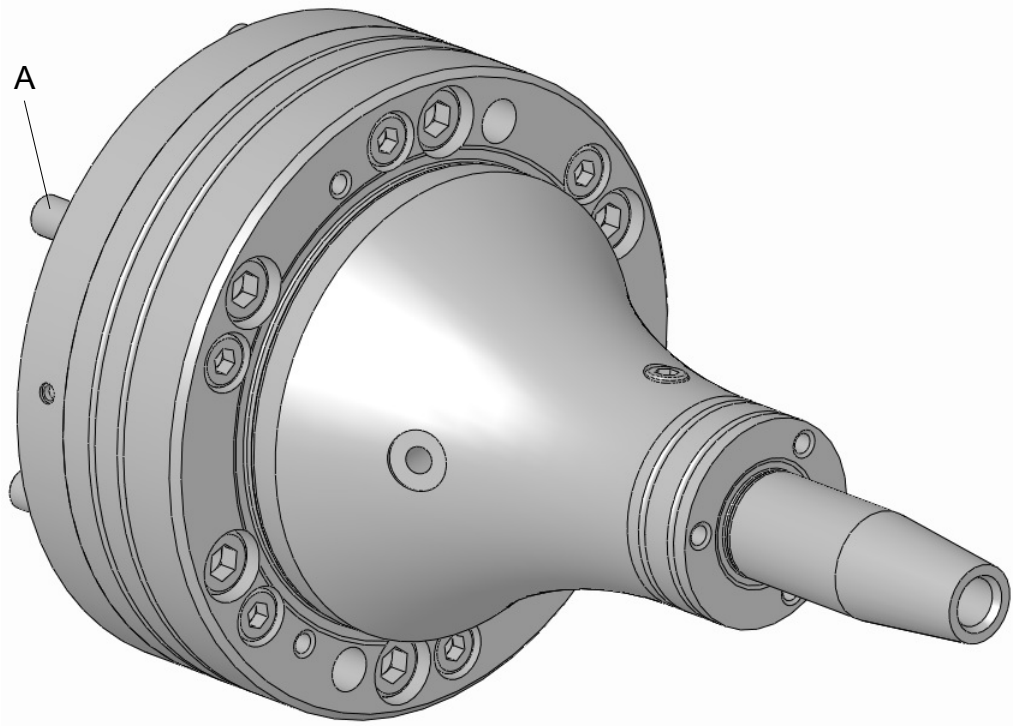

Fig. 27

3. Loosen and remove the cylindrical screws [A].
4. Remove the segmented mandrel from the machine.

7.2.5 Disassembly of the segmented mandrel [capteX]

For disassembly of the segmented mandrel following steps are to be done:

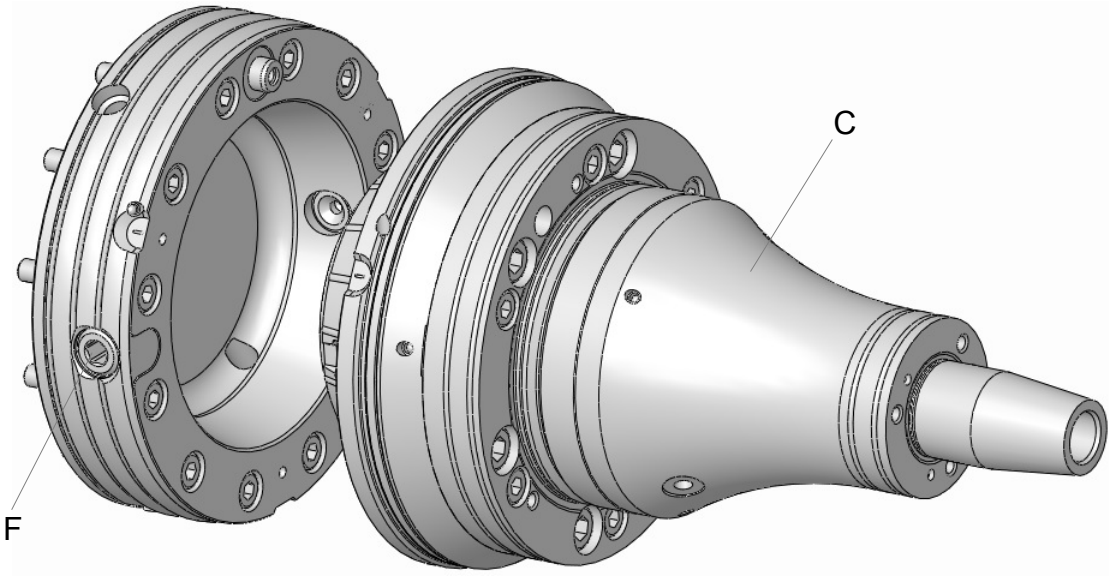

Fig. 28

CAUTION!

Risk of injury!

Secure the clamping device before assembling by the eye bolts and a crane!

Risk of injury!

Leaking hydraulic oil can cause serious injury.

- Make sure that the system is depressurized during installation!

1. Loosen the actuating screws [F] by using a key [in scope of delivery].
2. Remove the segmented mandrel from the machine.

7.3 Subsequent storage of the clamping device

The clamping device must be cleaned and treated with corrosion protection for subsequent storage [see section »Maintenance«].

NOTE!

The storage conditions are specified in the section »Transport, packaging and storage«.

7.4 Disposal

If a return or disposal agreement has not been concluded, then recycle disassembled components.

CAUTION!

Risk of injury due to leaking fluids!

Hydraulically or pneumatically operated clamping devices may contain residues of liquids. Uncontrolled leakage of fluids can lead to severe injuries.

- Open the pressure relief screw and drain remaining liquid.
- Discard the liquid.

NOTE!

Improper disposal causes environmental damage!

Lubricants and other auxiliary materials are subject to treatment as special waste, and should only be disposed of by approved specialist companies!

Local municipal authorities or specialized disposal companies provide information on environmentally-responsible disposal.

8 Maintenance

Environmental protection

Comply with the following instructions for environmental protection when performing maintenance work:

- At all lubricating points where lubricant is applied by hand, remove escaping, used, or excess grease, and dispose of it in accordance with applicable local regulations.
- Collect used oil in suitable containers and dispose of it in accordance with applicable local regulations.

8.1 General

Cleanliness of the appropriate end-stop as well as the guidance diameters are conditions for reaching the concentricity and perpendicularity tolerances. Clean these surfaces with an appropriate cleaner.

WARNING!

Risk of injury!

Always comply with the safety data sheets and guidelines provided by the manufacturer.

CAUTION

Danger of injury due to loss of clamping force!

Fouling of the clamping device can cause the clamping device to lose considerable clamping force.

- Always comply with the maintenance and cleaning intervals specified in this manual.
- In conjunction with the maintenance intervals, regularly check the maintenance status of the clamping device through clamping force measurements.

Risk of injury!

Slipping while the lubricating with a grease gun can lead to severe cuts!

NOTE!

Damage of seals and clamping elements [e.g. clamping head, segmented clamping bushing].

Seals ans clamping elements may be damaged due to us of wrong solvents.

- Do not use any solvents that contain ester or polar solvents for cleaning the clamping device.

8.2 Cleaning

NOTE!

Material damage if cleaned with compressed air!

Cleaning the clamping device with compressed air can force metal chips into thread and grooves. This can damage or even destroy the clamping device.

- Never clean the clamping device with compressed air!

- Auxiliary material required:
  - Ester-free, non-polar cleaning agent
  - Soft, lint-free cloth

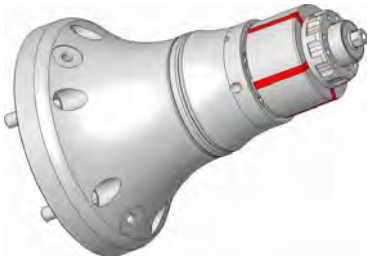

Fig. 29

1. Disassemble the clamping device [see section »Disassembling the clamping device«].
2. Clean all components listed below with cleaning agent and a cloth; remove all oil and grease residues:
   - Flange
   - Clamping unit
   - Taper of the segmented mandrel
   - Reception and inner thread for the clamping unit in the segmented mandrel
   - Workpiece end-stop
   - Cylindrical screws

8.3 Preservation

- Special tools required:
  - Universal grease 2085/0003
  - Grease gun
  - Oil stone
  - Soft, lint-free cloth

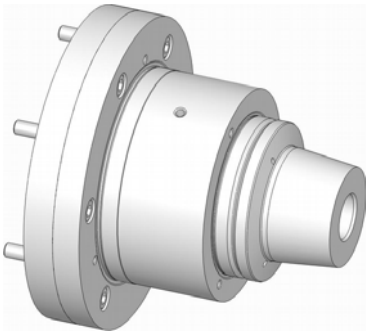

Fig. 30

1. Disassemble the clamping device [see section »Disassembling the clamping device«].
2. Hone all the bearing surfaces of the clamping device with an oil stone.
3. Lightly grease all cylindrical screws. Remove excess grease with a cloth.
4. Remount the clamping device.
5. Screw all cylindrical screws into the clamping device again and tighten them finger-tight.

   ! For subsequent storage tightening the cylindrical screws finger-tight suffices. This facilitates re-commissioning and protect the cylindrical screws.

6. Lightly grease all interior and outer surfaces of the clamping device. Remove excess grease with a cloth.
7. Pack the clamping device airtight in foil. Place it on a level, impact-free storage location and safeguard it from falling.

8.4 Use of lubricant

With the usage of lubricant you may only use grease that corresponds to the requirements concerning bond, pressure-stability and solubility in lubricating coolant. In addition no dirt particles may be in the grease; they cause run errors if they come in in-between two mating surfaces.
We recommend for this the following lubricant:

HAINBUCH grease

See optional Accessories

Alternatives:

Lubricant	Manufacturer	Product
Universal grease	MicroGleit	GP 355
	Klüber	QNB 50
	Zeller & Gmelin	DIVINOL SD24440
	Bremer & Leguill	RIVOLTA W.A.P.
Special grease	Klüber	MICROLUBE GL 261

8.5 Maintenance schedule

Maintenance tasks are described in the sections above that are required for optimal and trouble-free operation.

If increased wear is detected during regular inspections, then reduce the required maintenance intervals according to the actual indications of wear.

Contact the manufacturer, [see the service address on the back] if you have questions concerning maintenance tasks and intervals.

Interval	Maintenance task
Daily	Visual inspection and complete cleaning in case of heavy contamination [see section »Cleaning«], especially at the clamping and end-stop face to avoid damages at the clamping device and the clamping elements early.
Each 36 operating hour	Clean the clamping device and the clamping unit [see section »Cleaning«].
	Clean the clamping taper [see section »Cleaning«].
	Grease the clamping device [see section »Preservation«].
Every 6 months	Completely disassemble and clean the clamping unit [see section »Cleaning«].

! For proper operation of the coolant feed a prefiltering with duplex filter [mesh size 100 µm, PI 3754] is necessary. The duplex filter is mounted on the coolant cleaning system.

By using the clamping device in the 3-shift operating it should be maintained as follows:

- After **22 operation hours each**, the clamping element is to be taken from the clamping device and cone, coupling and clamping element (clamping element, segmented clamping bushing) are to be cleaned.
  Special attention applies for the coupling area.
- A general **visual inspection**, particularly at the clamping area and the end-stop face, is to be done to ascertain early damages at the clamping device and at the rubber of the clamping element.
- During maintenance also the seals of the segmented clamping bushing must be checked for any damage, if necessary they must be replaced.
- Depending on contamination a complete cleaning of all mobile parts should be accomplished.
- Approx. **2 times annually** the clamping device is must be divided and cleaned completely.
- With storage the clamping device must be cleaned in principle by lubricating coolant and be protected from rust with preservative at the surface.
- **Daily and additional when needed** the coupling area must be cleaned.

8.6 Bolt torque

Metric ISO thread

The guide values for bolt tightening torque for achieving the highest permissible pre-tension for metric ISO thread are specified in Nm in the table.

- Total friction coefficient μ_{tot} = 0,12

Diameter	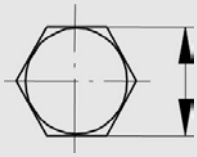 [mm]	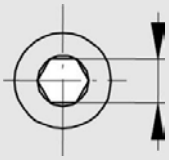 [mm]	Torque for screw quality 10.9 [Nm]
M 4	7	3	4
M 5	8	4	7
M 6	10	5	12
M 8	13	6	25
M 10	17	8	50
M 12	19	10	100
M 16	24	14	220
M 20	30	17	400
M 24	36	19	600

The table shows the prescribed values.

Knowledge of the applicable guidelines and configuration criteria are the prerequisites.

9 Trouble shooting

Possible fault causes and the tasks to correct these faults are described in the following section.

If faults occur more frequently, the maintenance intervals must be shortened to correspond to the actual system load.

Contact the manufacturer if there are faults that cannot be corrected by following the instructions below; see the service address on the back of this operating instruction.

9.1 Safety

Trouble shooting

The following always applies:

1. For faults that pose a direct danger for personnel and or property immediately execute the emergency-stop function of the machine.
2. Determine the cause of the fault.
3. If correction of the fault requires work in the danger zone, put the machine in set-up mode.
4. Immediately inform the responsible parties at the installation site of the fault.
5. Depending on the type of fault, either have authorized specialized personnel correct the fault, or correct it yourself.

   The trouble shooting table provided below lists personnel who are authorized to correct the fault.

6. If there is a fault that was not caused by the clamping device the cause of the fault may be in the machine area. See the operating manual for the machine in this regard.

9.2 Trouble shooting table

Fault	Possible cause	Fault correction	Corrected by
Clamping unit cannot be changed	Safety screw not loosened.	Unscrew the safety screw a bit [see section »Disassemble the clamping unit«].	Specialist
Clamping device does not open or release stroke is insufficient	Fouling between the draw mechanism and the clamping unit	Remove the clamping unite, move the drawtube back and clean the coupling area [see section »Disassembling the clamping unit«].	Specialist
	Dimensional deviation of the drawtube adapter	Check the dimensions of the drawtube adapter and correct them if necessary.	Specialist
Clamping force is too low	Work piece is over-dimensioned	Replace with a suitable clamping unit	Specialist
	Insufficient hydraulic pressure on the clamping cylinder	Check the machine side hydraulic aggregate	Hydraulic specialist
	Defective clamping cylinder or blocked drawtube	Contact the machine manufacturer	Machine manufacturer
	Compression springs fatigued [at permanent tension]	Replace compression springs	Specialist
Eccentric dimensional deviation on the work piece	Concentricity error of the segmented mandrel	Check the concentricity at the taper of the segmented mandrel, correct if necessary [see section »Checking and adjusting the face run and the concentricity«].	Specialist
Dimensional deviation on the work piece	Contaminated coupling area	Clean the coupling area of the clamping device [see section »Cleaning«].	Specialist
	Contaminated clamping taper	Disassemble the clamping unit and clean the clamping taper [see section »Cleaning«].	Specialist

Fault	Possible cause	Fault correction	Corrected by
Formal defect on the work piece	Elastic deformation of feedstock that is subject to formal defects. After machining the workpiece returns to its original form.	Use feedstock with fewer formal defects. If technically justifiably reduce the clamping pressure.	Specialist
Marks on the clamping surface	Point or linear work piece clamping	Replace with a clamping unit that has a smoother clamping surface	Specialist
	Excessive dimensional difference between the work piece diameter and the clamping bore	Replace with a clamping unit that has a suitable clamping bore	Specialist

9.3 Start-up after corrected fault

After correcting the fault execute the following steps to start up again:

1. Reset the emergency-stop device
2. Acknowledge the fault on the machine tool controller
3. Ensure that no one is in the danger zone
4. Start the machine tool

10 Appendix

10.1 Service Hotline

Order Hotline

Quickly ordered and delivered. A call is all it takes: +49 7144. 907-333

Schedule Hotline

Current status of your order? Just call: +49 7144. 907-222

24h emergency call

Has there been a crash or other technical emergency?
Our experts are at your service around the clock: +49 7144. 907-444

10.2 Representatives

The sales partners and service employees listed at www.hainbuch.com are available for further consultation or support.

Index

Manufacturers declaration

Hersteller / manufacturer:	HAINBUCH GmbH Spannende Technik Erdmannhäuser Straße 57 71672 Marbach Deutschland
Produktbezeichnung / product denomination:	**Segmented mandrel T213**

Der Hersteller bescheinigt, dass das oben genannte Produkt bei bestimmungsgemäßer Verwendung und unter Beachtung der Betriebsanleitung und der Warnhinweise am Produkt sicher im Sinne der nationalen Vorschriften ist und /
The manufacturer certifies that the above-mentioned product is safe in the sense of national regulations when used as intended and in compliance with the operating instructions and warnings on the product:

- eine Risikobeurteilung durchgeführt wurde in Anlehnung an /
  a risk assessment was carried out on the basis of
  EN ISO 12100:2011-03 Sicherheit von Maschinen – Allgemeine Gestaltungsleitsätze / Safety of Machinery – Basic concepts
- Nationale und europäische Normen einhält / it complies with national and european standards:
  DIN EN 1550:1997 Sicherheitsanforderungen für die Gestaltung und Konstruktion von Spannfuttern für die Werkstückaufnahme /
  Safety requirements for the design and construction of work holding chucks
- eine Betriebsanleitung in inhaltlicher Anlehnung an Maschinenrichtlinie Anhang I Nr. 1.7.4.2. und in inhaltlicher Anlehnung an die Bestimmungen des Anhang VI der Maschinenrichtlinie zur Montageanleitung erstellt wurde /
  an operation manual has been created in accordance with the contents of machinery directive annex I No. 1.7.4.2 and in accordance with the regulations of annex VI oft he machinery directive for the assembly instructions
- Kennzeichnungen in Anlehnung an EN 1550 Abschnitt 6.3.1 oder ISO 16156 Abschnitt 6.3. vorgenommen wurden. Es wurden dabei die Vorgaben in Anlehnung an Anhang I Nr. 1.7.3. der Maschinenrichtlinie eingehalten /
  markings have been made in accordance with EN 1550 Section 6.3.1 or ISO 16167 Section 6.3. The specifications in accordance with annex I No. 1.7.3 of the machinery directive were complied with.

HAINBUCH GMBH · SPANNENDE TECHNIK
PO Box 1262 · 71667 Marbach / Erdmannhauser Strasse 57 · 71672 Marbach · Germany
Phone +49 7144.907-0 · Fax +49 7144.18826 · sales@hainbuch.de · www.hainbuch.com
24h-Emergency call +49 7144.907-444

05.2018 Part no.: 80001/0184_en Subject to technical changes